8. Diagnostic Procedure with Diagnostic Trouble Code (DTC)

A: DTC 11

The malfunction is detected when the main switch is pressed or problem relating to the main switch occurs.

TROUBLE SYMPTOM:

- Cruise control cannot be set. (Cancelled immediately.)
- Cruise control cannot be released.

WIRING DIAGRAM:

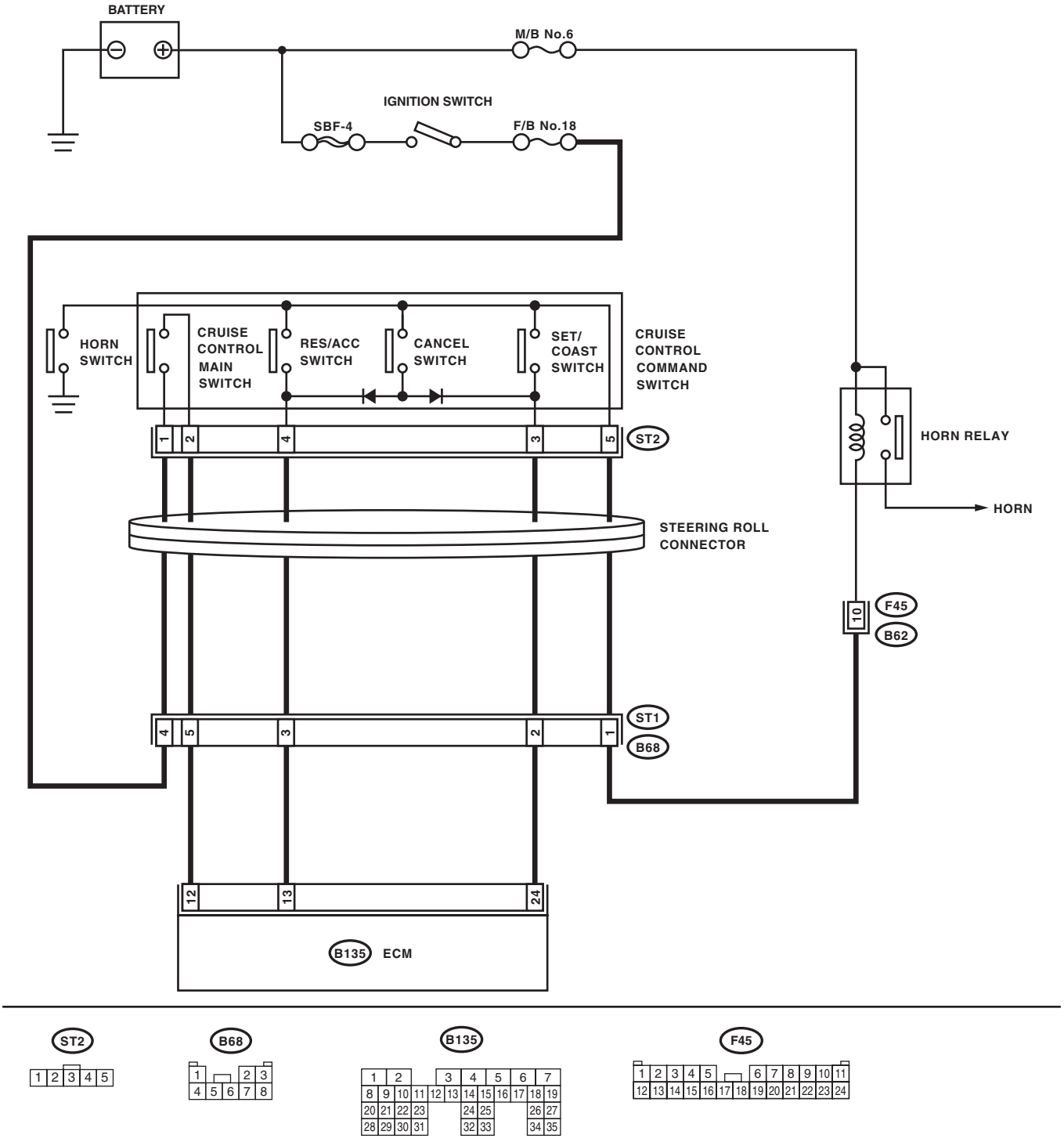

CC-00500

	Step	Check	Yes	No
1	**CHECK CRUISE CONTROL MAIN SWITCH CIRCUIT.** 1) Turn the ignition switch to OFF. 2) Disconnect the harness connector of ECM. 3) Turn the ignition switch to ON. 4) Measure the voltage between harness connector terminal and chassis ground when cruise control main switch is pressed and not pressed. ***Connector & terminal*** ***(B135) No. 12 (+) — Chassis ground (–):***	Is the voltage 0 V when cruise control main switch is not pressed? Is the voltage 10 V or more when cruise control main switch is pressed?	Go to step **2**.	• Check fuse No. 18 (in fuse & relay box). • Check open or shorted circuit of harness between cruise control command switch and fuse & relay box. If no malfunction is found after checking above, Go to step **6**.
2	**CHECK SET/COAST SWITCH CIRCUIT.** 1) Turn the ignition switch to OFF. 2) Disconnect the harness connector of ECM. 3) Measure the voltage between the harness connector terminal and chassis ground when SET/COAST switch is pressed and not pressed. ***Connector & terminal*** ***(B135) No. 24 (+) — Chassis ground (–):***	Is the voltage 0 V when SET/COAST switch is not pressed? Is the voltage 10 V or more when SET/COAST switch is pressed?	Go to step **3**.	Go to step **5**.
3	**CHECK RES/ACC SWITCH CIRCUIT.** Measure the voltage between harness connector terminal and chassis ground when RES/ACC switch is pressed and not pressed. ***Connector & terminal*** ***(B135) No. 13 (+) — Chassis ground (–):***	Is the voltage 0 V when RES/ACC switch is not pressed? Is the voltage 10 V or more when RES/ACC switch is pressed?	Go to step **4**.	Go to step **5**.
4	**CHECK CANCEL SWITCH CIRCUIT.** Measure the voltage between harness connector terminal and chassis ground when CANCEL switch is pressed and not pressed. ***Connector & terminal*** ***(B135) No. 13 (+) — Chassis ground (–):*** ***(B135) No. 24 (+) — Chassis ground (–):***	Is the voltage 0 V when CANCEL switch is not pressed? Is the voltage 10 V or more when CANCEL switch is pressed?	Cruise control command switch circuit is OK.	Go to step **5**.
5	**CHECK POWER SUPPLY FOR CRUISE CONTROL COMMAND SWITCH.** Check the horn operation.	Does the horn sound?	Go to step **6**.	• Check the fuse No. 6 (in main fuse box). • Check the horn relay. <Ref. to COM-3, HORN RELAY, INSPECTION, Horn System.> • Check open or shorted circuit of harness between cruise control command switch and fuse & relay box.
6	**CHECK CRUISE CONTROL COMMAND SWITCH.** Remove and check the cruise control command switch. <Ref. to CC-5, Cruise Control Command Switch.>	Is the cruise control command switch OK?	Check the harness between cruise control command switch and ECM.	Replace the cruise control command switch.

B: DTC 12

The DTC is detected when the brake pedal is pressed or problem relating to stop light and brake light switch occurs.

TROUBLE SYMPTOM:

- Cruise control cannot be set.
- Cruise control cannot be released.

WIRING DIAGRAM:

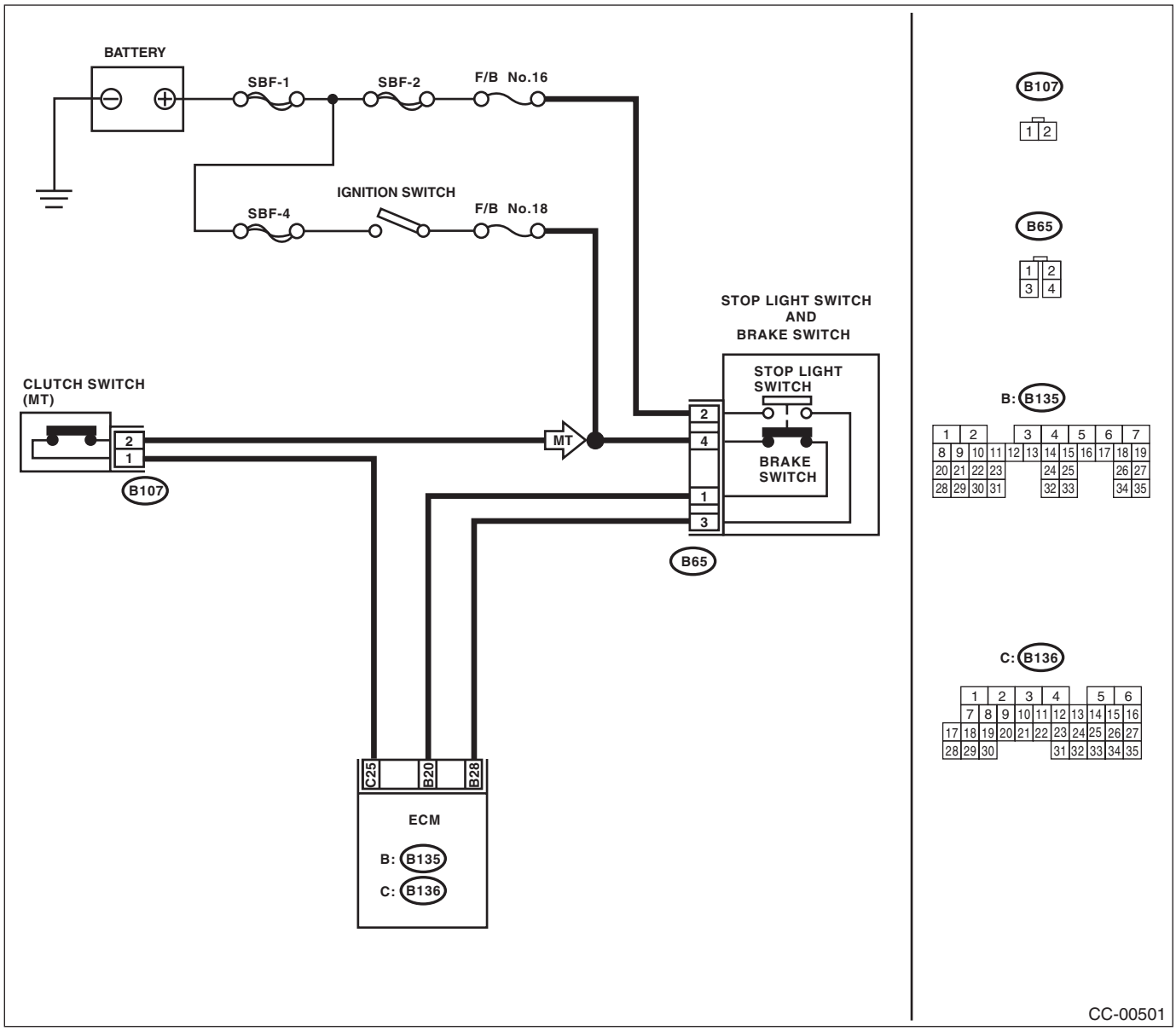

	Step	Check	Yes	No
1	**CHECK STOP LIGHT AND BRAKE SWITCH CIRCUIT.** 1) Turn the ignition switch to OFF. 2) Disconnect the stop light and brake switch harness connector. 3) Turn the ignition switch to ON. 4) Measure the voltage between harness connector terminal and chassis ground. ***Connector & terminal*** ***(B65) No. 2 (+) — Chassis ground (–):***	Is the voltage 10 V or more?	Go to step **2**.	• Check fuse No. 16 (in fuse & relay box). • Check for open or short in the harness between stop light and brake switch and fuse & relay box.
2	**CHECK STOP LIGHT AND BRAKE SWITCH CIRCUIT.** Measure the voltage between harness connector terminal and chassis ground. ***Connector & terminal*** ***(B65) No. 4 (+) — Chassis ground (–):***	Is the voltage 10 V or more?	Go to step **3**.	• Check fuse No. 18 (in fuse & relay box). • Check for open or short in the harness between stop light and brake switch and fuse & relay box. • Check the clutch switch and circuit.
3	**CHECK STOP LIGHT AND BRAKE SWITCH CIRCUIT.** 1) Turn the ignition switch to OFF. 2) Disconnect the harness connector of ECM. 3) Measure the resistance between the ECM harness connector terminal and stop light brake switch harness connector terminal. ***Connector & terminal*** ***(B135) No. 28 — (B65) No. 3:*** ***(B135) No. 20 — (B65) No. 1:***	Is the resistance less than 10 Ω?	Go to step **4**.	Repair the harness.
4	**CHECK STOP LIGHT AND BRAKE SWITCH CIRCUIT.** Remove and check the stop light and brake switch. <Ref. to CC-6, Stop light and brake Switch.>	Is the stop light and brake switch OK?	Stop light switch and brake switch are OK.	Replace the stop light and brake switch.

C: DTC 13

The DTC is detected when the clutch pedal is depressed or problem relating to the clutch switch occurs.

TROUBLE SYMPTOM:

- Cruise control cannot be set.
- Cruise control cannot be released.

WIRING DIAGRAM:

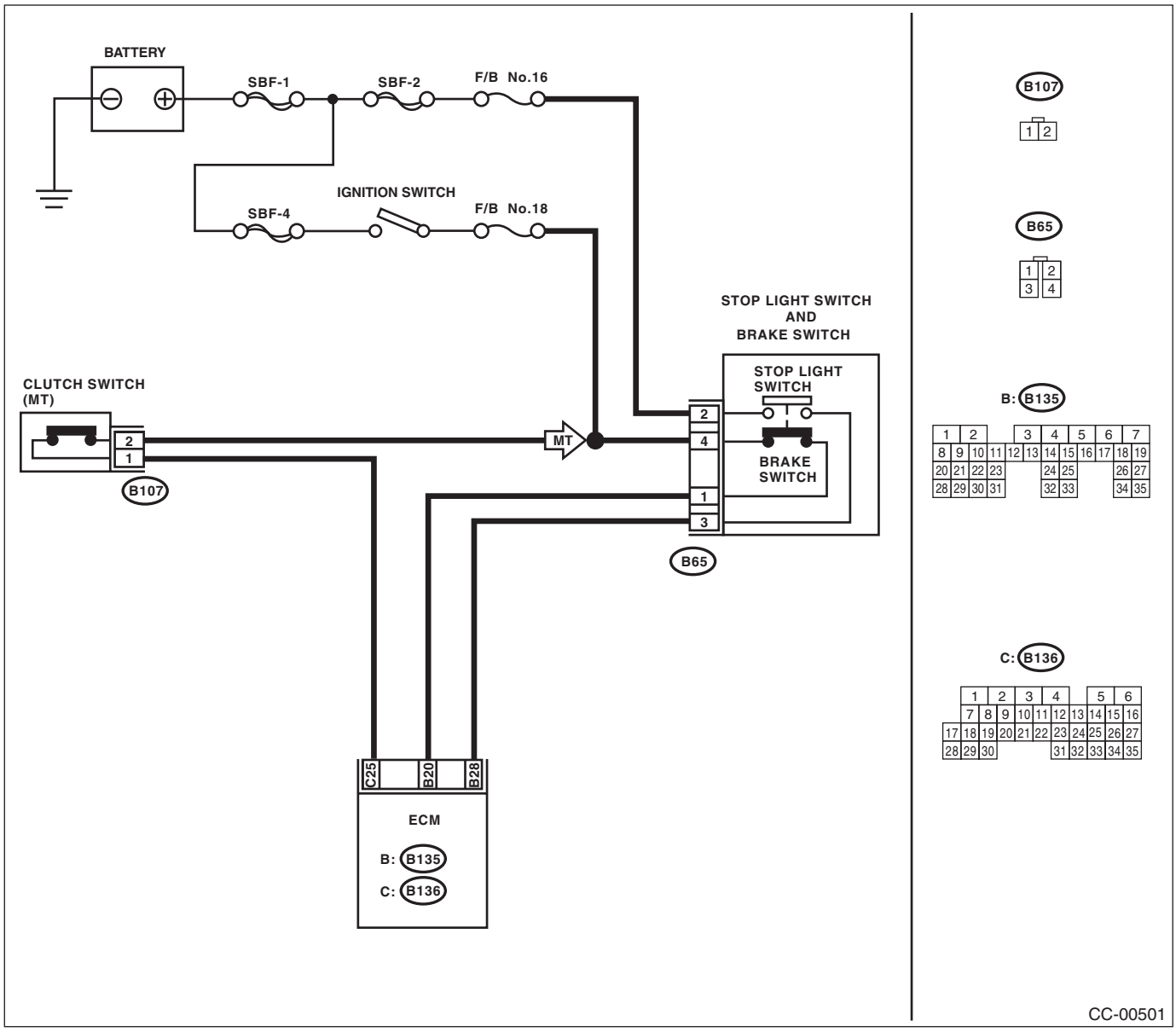

Step		Check	Yes	No
1	**CHECK CLUTCH SWITCH CIRCUIT.** 1) Turn the ignition switch to OFF. 2) Disconnect the clutch switch harness connector. 3) Turn the ignition switch to ON. 4) Measure the voltage between harness connector terminal and chassis ground. ***Connector & terminal*** ***(B107) No. 2 (+) — Chassis ground (–):***	Is the voltage 10 V or more?	Go to step **2**.	• Check fuse No. 18 (in fuse & relay box). • Check open or shorted circuit of harness between clutch switch and fuse & relay box.
2	**CHECK CLUTCH SWITCH CIRCUIT.** 1) Turn the ignition switch to OFF. 2) Disconnect the harness connector of ECM. 3) Measure the resistance between clutch switch harness connector terminal and ECM harness connector terminal. ***Connector & terminal*** ***(B107) No. 1 — (B136) No. 25:***	Is the resistance less than 10 Ω?	Go to step **3**.	Repair the harness.
3	**CHECK CLUTCH SWITCH.** Remove and check the clutch switch. <Ref. to CC-7, Clutch Switch.>	Is clutch switch OK?	Clutch switch circuit is OK.	Replace the clutch switch.

D: DTC 14

The DTC is detected when the select lever or shift lever is placed in neutral position or problem relating to the neutral position switch occurs.

TROUBLE SYMPTOM:

Cruise control cannot be set.

WIRING DIAGRAM:

- Non-turbo model

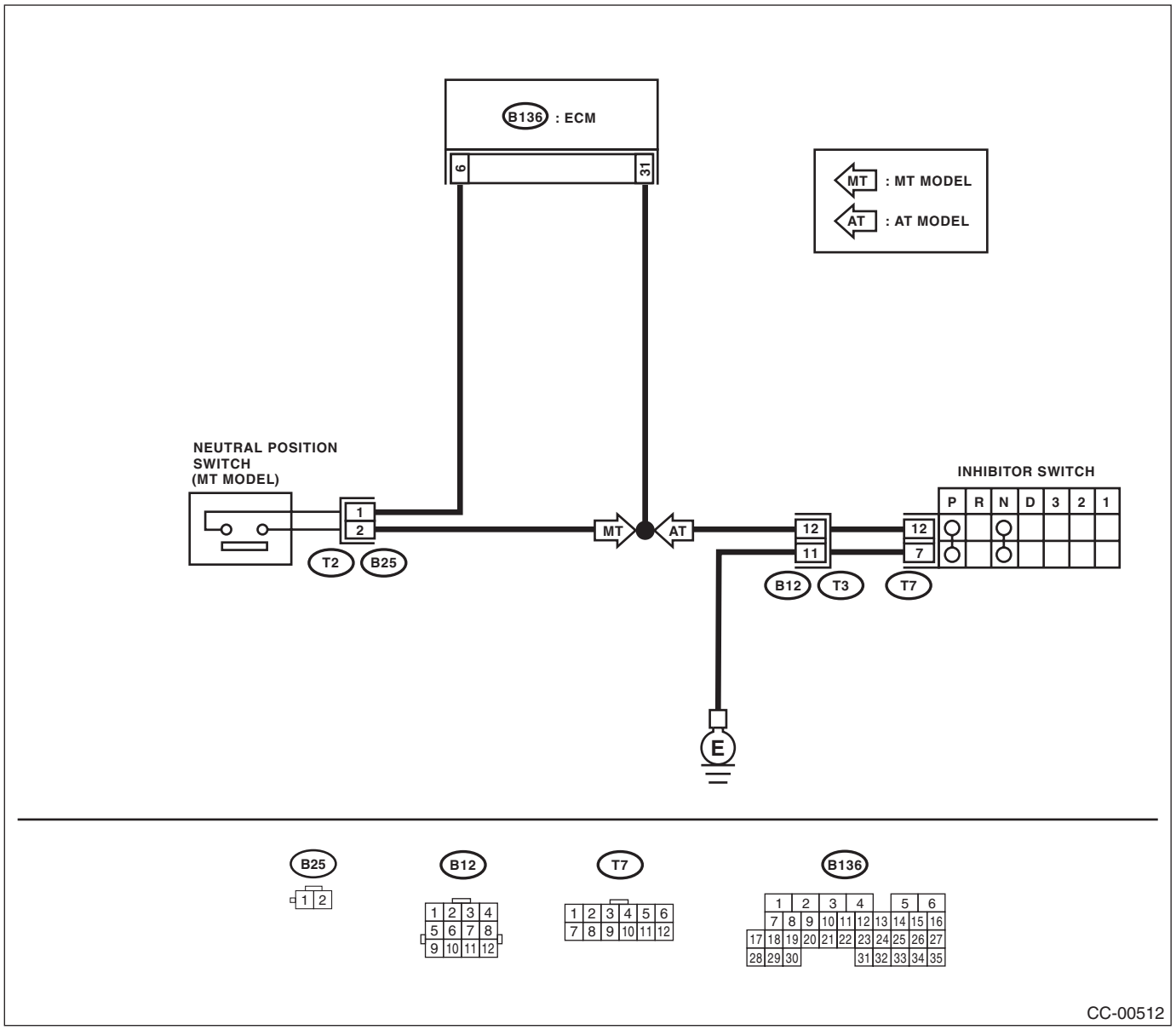

- Turbo model and STI model

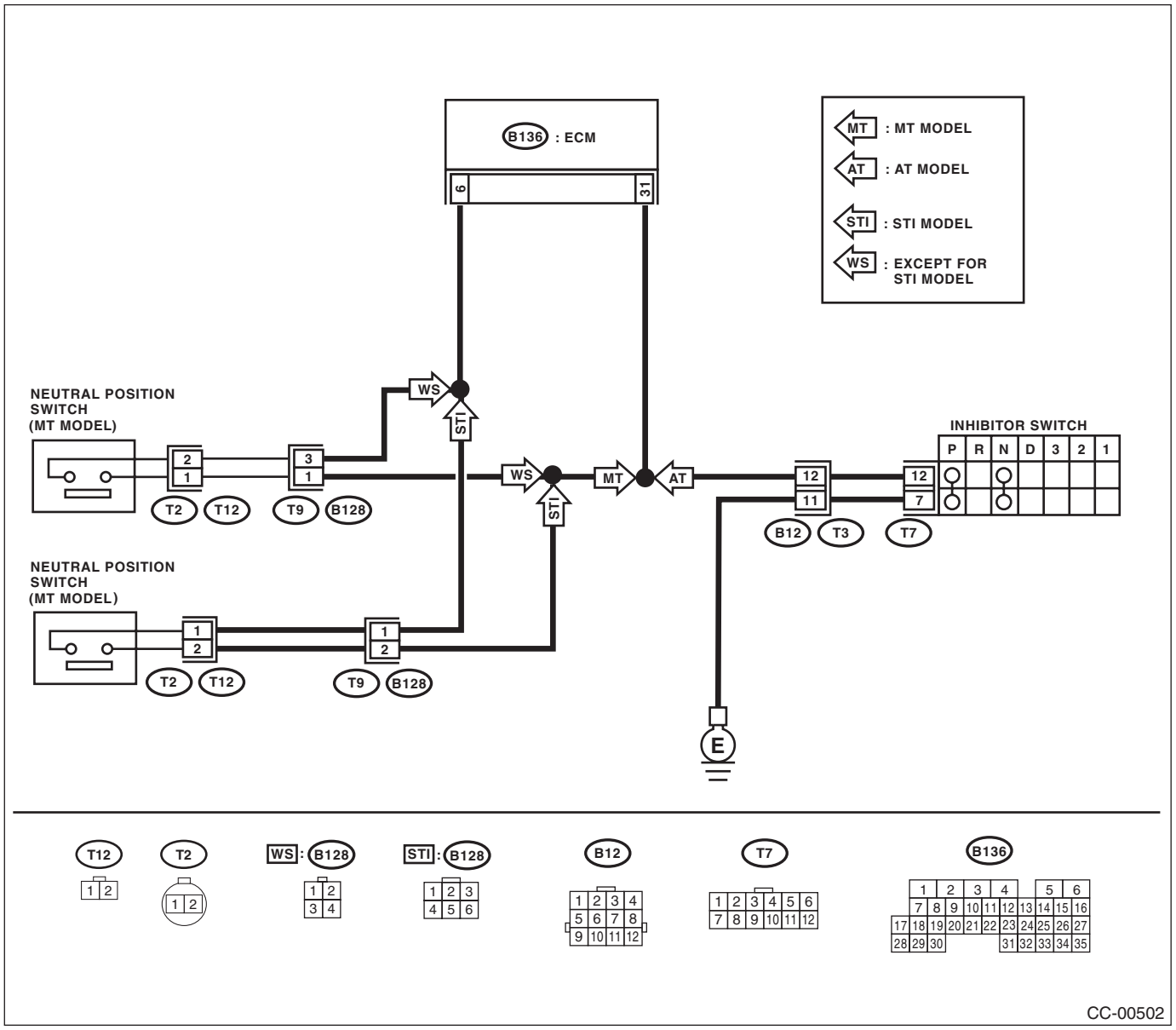

	Step	Check	Yes	No
1	**CHECK TRANSMISSION TYPE.**	Is the transmission type AT?	Go to step **2**.	Go to step **5**.
2	**CHECK INHIBITOR SWITCH CIRCUIT.** 1) Turn the ignition switch to OFF. 2) Disconnect the inhibitor switch harness connector. 3) Turn the ignition switch to ON. 4) Measure the voltage between harness connector terminal and chassis ground. ***Connector & terminal*** ***(T7) No. 12 (+) — Chassis ground (–):***	Is the voltage approx. 5 V?	Go to step **3**.	Check for open or short in the harness between inhibitor switch and ECM.
3	**CHECK INHIBITOR SWITCH CIRCUIT.** 1) Turn the ignition switch to OFF. 2) Disconnect the starter motor harness connector. 3) Measure the resistance between inhibitor switch harness connector terminal and chassis ground. ***Connector & terminal*** ***(T7) No. 7 — Chassis ground:***	Is the resistance less than 10 Ω?	Repair the harness.	Go to step **4**.
4	**CHECK INHIBITOR SWITCH.** Remove and check the inhibitor switch. <Ref. to CC-8, Inhibitor Switch.>	Is the inhibitor switch OK?	Replace the ECM. <Ref. to FU(H4SO)-39, Engine Control Module (ECM).> <Ref. to FU(H4DOTC)-50, Engine Control Module (ECM).>	Replace the inhibitor switch.
5	**CHECK NEUTRAL POSITION SWITCH CIRCUIT.** 1) Turn the ignition switch to OFF. 2) Disconnect the neutral position switch harness connector. 3) Turn the ignition switch to ON. 4) Measure the voltage between harness connector terminal and chassis ground. ***Connector & terminal*** ***Non-turbo model:*** ***(B25) No. 1 (+) — Chassis ground (–):*** ***Turbo model:*** ***(B128) No. 1 (+) — Chassis ground (–):*** ***STI model:*** ***(B128) No. 2 (+) — Chassis ground (–):***	Is the voltage 10 V or more?	Go to step **6**.	Check for open or short in the harness between neutral position switch and ECM.
6	**CHECK NEUTRAL POSITION SWITCH CIRCUIT.** 1) Turn the ignition switch to OFF. 2) Measure resistance between harness connector terminal of neutral position switch and chassis ground. ***Connector & terminal*** ***Non-turbo model:*** ***(B25) No. 2 — Chassis ground:*** ***Turbo model:*** ***(B128) No. 3 — Chassis ground:*** ***STI model:*** ***(B128) No. 5 — Chassis ground:***	Is the resistance less than 10 Ω?	Go to step **7**.	Repair the harness.
7	**CHECK NEUTRAL POSITION SWITCH.** Remove and check the neutral position switch. <Ref. to CC-9, Neutral Position Switch.>	Is the neutral position switch OK?	The neutral position switch circuit is operating properly.	Replace the neutral position switch.

E: DTC 15

This DTC is detected when the cancel switch is pressed or problem relating to the cruise control command switch occurs.

TROUBLE SYMPTOM:

- Cruise control cannot be set. (Cancelled immediately.)
- Cruise control cannot be released.

Refer to DTC 11 for diagnostic procedure. <Ref. to CC(ETC)(diag)-19, DTC 11, Diagnostic Procedure with Diagnostic Trouble Code (DTC).>

F: DTC 16

This DTC is detected when the ignition switch is turned OFF or problem relating to the ignition switch occurs.

TROUBLE SYMPTOM:

Cruise control cannot be set.

WIRING DIAGRAM:

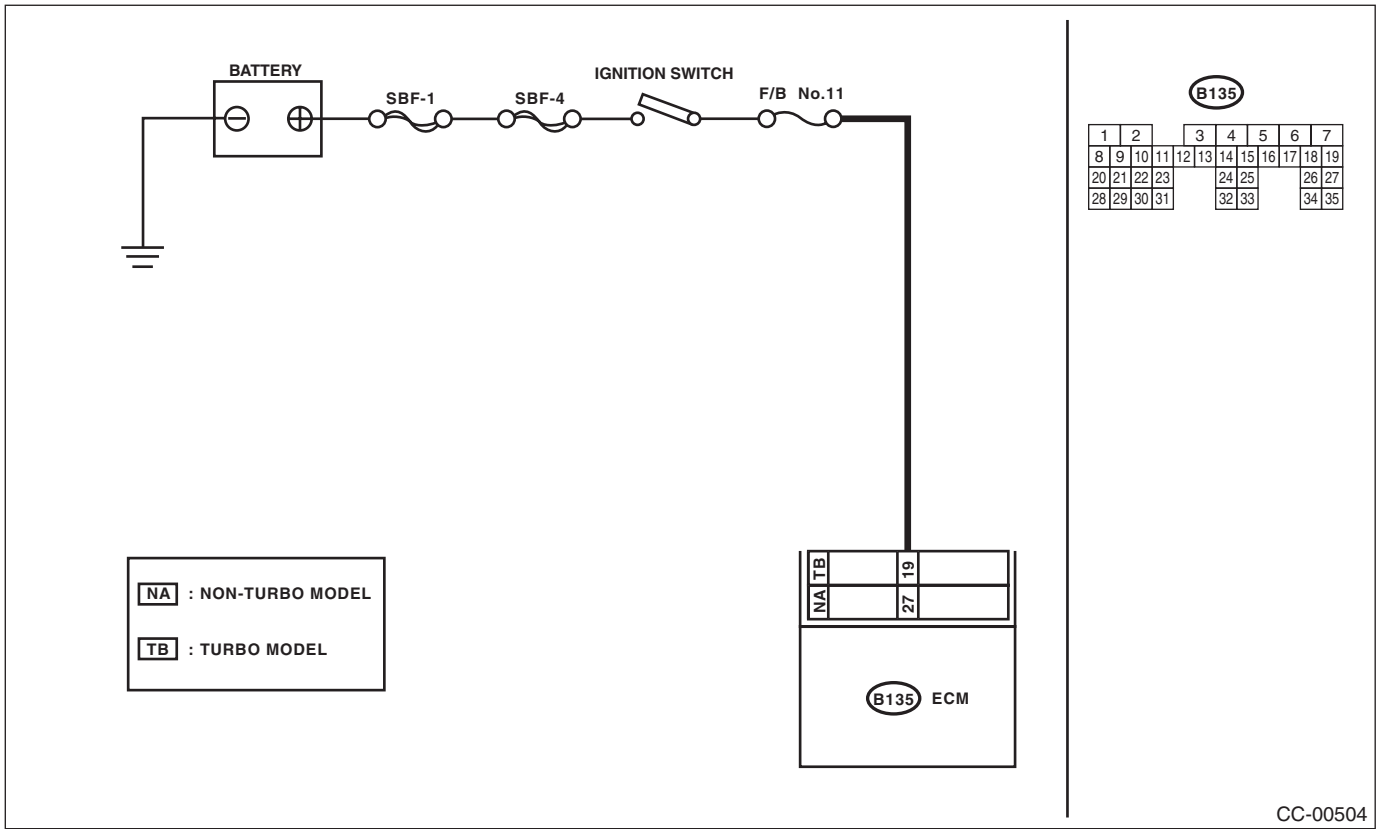

Step	Check	Yes	No
1 **CHECK IGNITION SWITCH CIRCUIT.** 1) Turn the ignition switch to OFF. 2) Disconnect the ECM harness connector. 3) Turn the ignition switch to ON. 4) Measure the voltage between harness connector terminal and chassis ground. ***Connector & terminal*** ***Non-turbo model:*** ***(B135) No. 27 (+) — Chassis ground (–):*** ***Turbo model:*** ***(B135) No. 19 (+) — Chassis ground (–):***	Is the voltage 10 V or more?	Check poor contact of ECM connector.	• Check fuse No. 11 (in fuse & relay box). • Check the harness for open or short circuit between ignition switch and ECM.

G: DTC 21

Cruise control command switch malfunction is detected.

TROUBLE SYMPTOM:

- Cruise control cannot be set. (Cancelled immediately.)
- Cruise control cannot be released.

Refer to DTC 11 for diagnostic procedure. <Ref. to CC(ETC)(diag)-19, DTC 11, Diagnostic Procedure with Diagnostic Trouble Code (DTC).>

H: DTC 22

Malfunction related to vehicle speed sensor is detected.

DIAGNOSIS:

Open or shorted circuit in vehicle speed sensor system.

TROUBLE SYMPTOM:

Cruise control cannot be set. (Cancelled immediately.)

WIRING DIAGRAM:

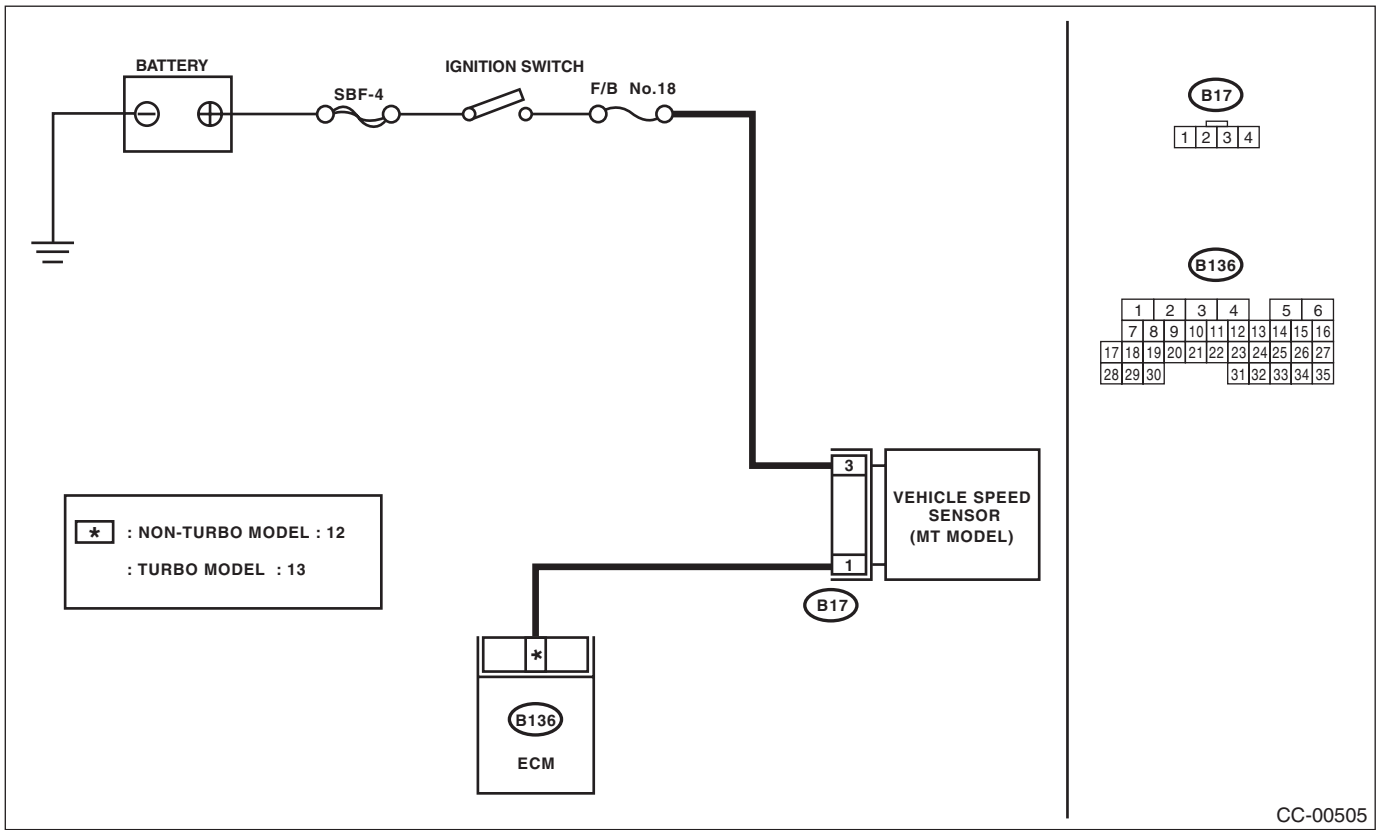

	Step	Check	Yes	No
1	**CHECK HARNESS BETWEEN BATTERY AND VEHICLE SPEED SENSOR.** 1) Turn the ignition switch to OFF. 2) Disconnect harness connector from vehicle speed sensor. 3) Turn the ignition switch to ON. 4) Measure voltage between vehicle speed sensor harness connector terminal and chassis ground. ***Connector & terminal*** ***(B17) No. 3 (+) — Chassis ground (–):***	Is the voltage 10 V or more?	Go to step **2**.	Check for open or shorted circuit in the harness between fuse and vehicle speed sensor.
2	**CHECK HARNESS BETWEEN ECM AND VEHICLE SPEED SENSOR.** 1) Turn the ignition switch to OFF. 2) Disconnect harness connector from ECM. 3) Measure the resistance between harness connector terminals of vehicle speed sensor and of ECM. ***Connector & terminal*** ***(B17) No. 1 — (B135) No. 27:***	Is the resistance less than 10 Ω?	Go to step **3**.	Repair the harness.
3	**CHECK HARNESS BETWEEN VEHICLE SPEED SENSOR AND ENGINE GROUND.** 1) Turn the ignition switch to OFF. 2) Measure resistance between vehicle speed sensor harness connector terminal and engine ground. ***Connector & terminal*** ***(B17) No. 2 — Engine ground:***	Is the resistance less than 10 Ω?	Go to step **4**.	Repair the harness.
4	**CHECK VEHICLE SPEED SENSOR.** 1) Connect the harness connector to the vehicle speed sensor. 2) Lift up the vehicle. 3) Drive the vehicle at speed greater than 20 km/h (12 MPH). **WARNING:** **Be careful not to be dragged in by the rotating wheel.** 4) Measure the voltage between ECM harness connector terminal and chassis ground. ***Connector & terminal*** ***Non-turbo model:*** ***(B136) No. 12 (+) — Chassis ground (–):*** ***Turbo model:*** ***(B136) No. 13 (+) — Chassis ground (–):***	Is the voltage less than 1 V ←→ 5 V or more?	Check poor contact of ECM connector.	Replace the vehicle speed sensor.

I: DTC 24

Malfunction in cruise control-related switch is detected.
TROUBLE SYMPTOM:
- Cruise control cannot be set. (Cancelled immediately.)
- Cruise control cannot be released.

Refer to DTC 11 for diagnostic procedure. <Ref. to CC(ETC)(diag)-19, DTC 11, Diagnostic Procedure with Diagnostic Trouble Code (DTC).>

J: DTC 25

Malfunction of brake input circuit in ECM is detected.
Refer to the Engine Diagnostic Procedure for diagnostic procedure.
<Ref. to EN(H4SO)(diag)-2, PROCEDURE, Basic Diagnostic Procedure.>
<Ref. to EN(H4DOTC)(diag)-2, PROCEDURE, Basic Diagnostic Procedure.>
<Ref. to EN(STI)(diag)-2, PROCEDURE, Basic Diagnostic Procedure.>

K: DTC 31

Malfunction of the engine speed signal is detected.
Abnormal increase of engine speed is detected.
Gear is set to 1st or Reverse position.
After driving at the 2nd gear position or higher, perform the cruise setting again. If the DTC is not detected, it is normal.

L: DTC 32

This DTC is detected out of vehicle speed range.
Increase vehicle speed high enough to allow the cruise control to function, and then perform setting operation again.
If the DTC is detected after performing the setting operation, perform DTC 22 diagnosis.
Refer to DTC 22 for diagnostic procedure.
<Ref. to CC(ETC)(diag)-30, DTC 22, Diagnostic Procedure with Diagnostic Trouble Code (DTC).>

M: DTC 34

The vehicle has been driven at a speed higher than set speed for a long time (approximately 10 minutes) during cruise driving.
DTC is detected when driving for a long period of time at higher speed than appropriate cruise speed by operating accelerator pedal.
Perform the cruise control setting operation again. If the DTC is not detected, it is normal.

N: DTC 35

Detected when it is impossible to perform the vehicle speed feedback.
Set vehicle speed cannot be kept for some reasons (steep uphill, unreleased parking brake, etc.) during cruise driving.
DTC is detected when driving condition is not suitable for cruise control.
Perform cruise set operation again after clearing the possible cause.

O: DTC 43

ABS/VDC malfunction is detected.
VDC malfunction is detected during cruise driving or cruise setting.
<Ref. to ABS(diag)-2, PROCEDURE, Basic Diagnostic Procedure.>

P: DTC 61

Malfunction in the stop light and brake switch is detected.
TROUBLE SYMPTOM:
- Cruise control cannot be set.
- Cruise control cannot be released.

Refer to DTC 12 for diagnostic procedure.
<Ref. to CC(ETC)(diag)-21, DTC 12, Diagnostic Procedure with Diagnostic Trouble Code (DTC).>

Q: DTC 62

Neutral position switch malfunction is detected.
TROUBLE SYMPTOM:
Cruise control cannot be set.
Refer to DTC 14 for diagnostic procedure.
<Ref. to CC(ETC)(diag)-25, DTC 14, Diagnostic Procedure with Diagnostic Trouble Code (DTC).>

R: DTC 63

Malfunction of vehicle speed signal variation is detected.
TROUBLE SYMPTOM:
Cruise control cannot be set. (Cancelled immediately.)
Refer to DTC 22 for diagnostic procedure.
<Ref. to CC(ETC)(diag)-30, DTC 22, Diagnostic Procedure with Diagnostic Trouble Code (DTC).>

S: DTC 64

Malfunction related to engine is detected.
Refer to the Engine Diagnostic Procedure for diagnostic procedure.
<Ref. to EN(H4SO)(diag)-2, PROCEDURE, Basic Diagnostic Procedure.>
<Ref. to EN(H4DOTC)(diag)-2, PROCEDURE, Basic Diagnostic Procedure.>
<Ref. to EN(STI)(diag)-2, PROCEDURE, Basic Diagnostic Procedure.>

T: DTC 65

Cruise control command switch malfunction is detected.
While the command switch is pressed ON for a long time (approximately two minutes), stuck ON condition is detected.
Trouble symptom:
- Cruise control cannot be set. (Cancelled immediately.)
- Cruise control cannot be released.

Refer to DTC 11 for diagnostic procedure. <Ref. to CC(ETC)(diag)-19, DTC 11, Diagnostic Procedure with Diagnostic Trouble Code (DTC).>

U: DTC 66

Cruise control calculation malfunction is detected.
Refer to the Engine Diagnostic Procedure for diagnostic procedure. <Ref. to EN(H4SO)(diag)-2, PROCEDURE, Basic Diagnostic Procedure.> <Ref. to EN(H4DOTC)(diag)-2, PROCEDURE, Basic Diagnostic Procedure.> <Ref. to EN(STI)(diag)-2, PROCEDURE, Basic Diagnostic Procedure.>

IMMOBILIZER (DIAGNOSTICS)

IM(diag)

		Page
1.	Basic Diagnostic Procedure	2
2.	General Description	3
3.	Electrical Component Location	5
4.	Immobilizer Control Module I/O Signal	6
5.	Subaru Select Monitor	7
6.	Read Diagnostic Trouble Code (DTC)	8
7.	Clear Memory Mode	9
8.	Diagnostics Chart for Security Indicator Light	10
9.	List of Diagnostic Trouble Code (DTC)	14
10.	Diagnostic Procedure with Diagnostic Trouble Code (DTC)	15